WITH MORE THAN 60 YEARS OF EXPERIENCE IN COMPRESSOR TECHNOLOGY AND HIGHLY COMMITTED EMPLOYEES, OUR FOCUS IS TO DEVELOP AND APPLY THE ADVANCED COMPRESSOR TECHNOLOGIES TO ACHIEVE STANDARD SETTING PERFORMANCE FOR LEADING PRODUCTS AND BUSINESSES AROUND THE WORLD.

60 YEARS 1956-2016

SECOP

HERMETIC COMPRESSORS FOR AC VOLTAGE

R134a • 220-240 V • 50 Hz

Compressor	Code number	Application	ASHRAE Capacity [W] T_c=54.4°C, T_{liq}=32.2°C, T_{suc}=32.2°C Evaporating temperature [°C]						ASHRAE LBP rating point -23.3°C / 54.4°C		ASHRAE MBP rating point -6.7°C / 54.4°C		ASHRAE HBP rating point 7.2°C / 54.4°C		Displacement	Voltage and frequencies (* dual frequency type with 50/60 Hz)	Compressor cooling (refer to data sheet)
			-35	-15	-5	0	10	15	Cooling capacity [W]	COP [W/W]	Cooling capacity [W]	COP [W/W]	Cooling capacity [W]	COP [W/W]	[cm³]		
PL20F	101G0100	MBP		46	81	103			24	0.55	67	1.12			1.41	198-254 V, 50 Hz	S
PL35F	101G0202	MBP		75	125	156			45	0.86	105	1.39			2.00	198-254 V, 50 Hz	S
PL50F	101G0220	LBP	18	92					56	0.89					2.50	198-254 V, 50 Hz	S
PL50F	101G0222	MBP		92	149	184			56	0.92	126	1.41			2.50	198-254 V, 50 Hz	F1
PLE50F	101G0221	MBP		95	152	187			59	1.08	128	1.63			2.50	198-254 V, 50 Hz	S
TL2.5F	102G4200	L/MBP		81	137	170			46	0.80	115	1.35			2.61	198-254 V, 50 Hz	S
TL3F	102G4300	L/MBP		101	171	215			59	0.85	144	1.36			3.13	198-254 V, 50 Hz	S
TL4F	102G4400	LBP	38	133					84	0.98					3.86	198-254 V, 50 Hz	S
TL5F	102G4501	LBP	53	179					113	1.06					5.08	198-254 V, 50 Hz	S
TLS5F	102G4520	LBP	59	210					135	1.15					5.08	198-254 V, 50 Hz	S
TLS6F	102G4620	LBP	72	227					143	1.14					5.70	198-254 V, 50 Hz	S
TLS7F	102G4720	LBP	82	258					165	1.15					6.49	198-254 V, 50 Hz	S
TLS3FT	102G4324	LBP	26	115					69	1.07					3.13	187-254 V, 50 Hz	S
TLS4FT	102G4424	LBP	34	145					88	0.97					3.86	187-254 V, 50 Hz	S
TFS4.5FT	102G4433	LBP	56	193	309				123	1.12	261	1.71			4.63	176-242 V, 50 Hz	S
TLS5FT	102G4524	LBP	59	210					135	1.12					5.08	187-254 V, 50 Hz	S
TLES3F	102G4310	L/MBP		116	192	240			70	1.08	161	1.62			3.13	198-254 V, 50 Hz	S
TLES4F	102G4410	LBP	41	154					97	1.16					3.86	198-254 V, 50 Hz	S
TLES5F	102G4510	LBP	62	210					134	1.22					5.08	198-254 V, 50 Hz	S
TLES6F	102G4610	LBP	72	227					143	1.21					5.70	198-254 V, 50 Hz	S
TLES5.7FT.3	102G4615	LBP	82	248					163	1.31					5.70	187-254 V, 50 Hz	S
TLY4F	102G4441	LBP	43	157					99	1.30					3.86	198-254 V, 50 Hz	S
TLY5FK	102G4547	LBP	62	210					134	1.32					5.08	198-254 V, 50 Hz	S
NL6F	105G6606	LBP	64	248					152	1.22					6.13	198-254 V, 50 Hz	S
NL7F	105G6706	LBP	88	295					187	1.21					7.27	198-254 V, 50 Hz	S
NF7FX	105G6743	L/MBP		325	523	647			206	1.12	441	1.71	781	2.43	7.27	198-242 V, 50 Hz	F1
NL8F	105G6822	LBP	100	308					201	1.25					7.95	198-254 V, 50 Hz	S
NL9F	105G6802	LBP	92	332					213	1.21					8.35	198-254 V, 50 Hz	S
NF9FX	105G6841	L/MBP		357	576	716			229	1.10	485	1.64	874	2.36	8.34	198-242 V, 50 Hz	F1
NL11F	105G6900	LBP	127	436					274	1.23					11.15	198-254 V, 50 Hz	F2
NF11FX	105G6944	L/MBP		455	726	899			294	0.97	612	1.46	1092	2.08	11.15	198-242 V, 50 Hz	F2
NL11MF	105G6151	M/HBP		471	756	939	1402	1689			638	1.66	1144	2.26	11.15	187-254 V, 50 Hz	F2
NL6.1FT	105G6620	LBP	74	245					157	1.21					6.13	187-254 V, 50 Hz	S
NL7FT	105G6718	LBP	88	291					186	1.22					7.27	187-254 V, 50 Hz	S
NL7.3FT	105G6726	LBP	88	291					186	1.22					7.27	187-254 V, 50 Hz	S
NL8.4FT	105G6865	LBP	107	341					220	1.24					8.35	187-254 V, 50 Hz	F1
NL9FT	105G6828	LBP	107	341					220	1.24					8.35	187-254 V, 50 Hz	S
NL10FT	105G6829	LBP	141	434					285	1.25					10.09	187-254 V, 50 Hz	S
NLE9F	105G6805	LBP	101	336					212	1.33					8.35	198-254 V, 50 Hz	S
NLE10MF	105G6888	MBP	110	426	687	855			268	1.28	579	1.76	1044	2.40	10.09	198-254 V, 50 Hz	F1
NLY6F	105G6630	LBP	99	291					188	1.51					6.70	198-254 V, 50 Hz	S
NLY7F	105G6730	LBP	115	328					214	1.53					7.27	198-254 V, 50 Hz	S
NLY9FK	105G6830	LBP	117	369					238	1.50					8.35	198-254 V, 50 Hz	S
FR11G	103G6980	L/M/HBP		381	622	781			236	1.10	523	1.54			11.15	187-254 V, 50 Hz	F1
SC15F	104G8500	LBP	126	546	902				324	1.11	759	1.63			15.28	198-254 V, 50 Hz	F1
SC18F	104G8800	LBP	159	641	1042				389	1.17	879	1.67			17.69	198-254 V, 50 Hz	F1
SC21F	104G8100	LBP	228	743	1219				458	1.14	1026	1.59			20.95	198-254 V, 50 Hz	F1
SC21FTX	104G8105	LBP	241	886	1393				570	1.27	1178	1.82			20.95	187-254 V, 50 Hz	F2
SC15MFX	104G8501	MBP		569	952	1186	1751		326	1.10	800	1.71	1436	2.38	15.28	198-254 V, 50 Hz	F2
SC21MFX	104G8120	MBP		820	1306	1618	2411		533	1.21	1101	1.70	1969	2.38	20.95	187-254 V, 50 Hz	F2
SC18GH	104G8860	HBP		667	1063	1340	2051	2485			892	1.67	1665	2.35	17.69	198-254 V, 50 Hz	F2
SC12/12G	104G8280	L/M/HBP	163	866	1500	1910	2946	3587	497	1.03	1252	1.65	2388	2.36	25.74	187-254 V, 50 Hz	F2
SC15/15G	104G8580	L/M/HBP		1055	1811	2258	3342	4001	522	1.01	1519	1.61	2737	2.27	30.56	187-254 V, 50 Hz	F2
SC18/18G	104G8880	L/M/HBP		1299	2153	2691	4032	4850	783	1.12	1808	1.68	3291	2.31	35.38	187-254 V, 50 Hz	F2
SC21/21G	104G8180	L/M/HBP		1510	2523	3160	4710	5630	923	1.13	2116	1.72	3855	2.37	41.90	187-254 V, 50 Hz	F2
GS26MFX	107B0700	MBP		1164	1892	2354					1592	2.13			26.30	198-254 V, 50 Hz	F2
GS34MFX	107B0701	MBP		1511	2473	3090					2079	2.10	3799	2.90	33.80	198-254 V, 50 Hz	F2
GS26GHX	107B0702	HBP		1088	1748	2175	3273	3965			1472	1.84	2664	2.58	26.30	198-254 V, 50 Hz	F2

Dimensions						Electrical equipment											
						LST (RSIR & RSCR) refer to data sheet for more info					Run capacitor (RC)		HST (CSIR & CSR) * alt. cable lengths avail.			LST/HST	
Height [mm]		Connectors location/I.D. [mm]			alt. connectors available	PTC starting device		PTC starting device with RC connector		ePTC	• optional • compulsory *		Starting relay	Starting capacitor	Starting device *	Cord relief	Cover
		Suction	Process	Dis-charge		Spades		Spades		Spades	Spades		Spades		Spades		
A	B	C	D	E		6.3 mm	4.8 mm	6.3 mm	4.8 mm	4.8 mm	6.3 mm	4.8 mm	6.3 mm	6.3 mm	6.3 mm		
129	127	6.2	6.2	5.0		103N0011	103N0018									103N1010	103N0491
134	132	6.2	6.2	5.0		103N0011	103N0018									103N1010	103N0491
137	135	6.2	6.2	5.0		103N0011	103N0018									103N1010	103N0491
137	135	6.2	6.2	5.0									117U6021	117U5014		103N1010	103N0491
140	138	6.2	6.2	5.0				103N0016	103N0021		117-7117 *	117-7119 *				103N1010	103N0491
163	159	6.2	6.2	5.0	X	103N0011	103N0018									103N1010	103N2010
163	159	6.2	6.2	5.0		103N0011	103N0018						117U6007	117U5014		103N1010	103N2010
163	159	6.2	6.2	5.0	X	103N0011	103N0018						117U6009	117U5014		103N1010	103N2010
173	169	6.2	6.2	5.0		103N0011	103N0018						117U6004	117U5014		103N1010	103N2010
173	169	6.2	6.2	5.0		103N0011	103N0018						117U6004	117U5014		103N1010	103N2010
173	169	6.2	6.2	5.0		103N0011	103N0018						117U6004	117U5014		103N1010	103N2010
173	169	6.2	6.2	5.0		103N0011	103N0018	103N0016	103N0021		117-7117	117-7119	117U6000	117U5014		103N1010	103N2010
173	169	6.2	6.2	5.0		103N0011	103N0018						117U6007	117U5014		103N1010	103N2010
173	169	6.2	6.2	5.0	X	103N0011	103N0018						117U6004	117U5014		103N1010	103N2010
173	169	6.5	6.5	5.0	X											117U0349	117U1023
173	169	6.2	6.2	5.0	X	103N0011	103N0018						117U6000	117U5014		103N1010	103N2010
173	169	6.2	6.2	5.0		103N0011	103N0018	103N0016	103N0021		117-7117	117-7119				103N1010	103N2010
173	169	6.2	6.2	5.0		103N0011	103N0018	103N0016	103N0021		117-7117	117-7119				103N1010	103N2010
173	169	6.2	6.2	5.0		103N0011	103N0018	103N0016	103N0021		117-7117	117-7119				103N1010	103N2010
173	169	6.2	6.2	5.0	X	103N0011	103N0018	103N0016	103N0021		117-7117	117-7119				103N1010	103N2010
173	169	6.2	6.2	5.0	X	103N0011	103N0018	103N0016	103N0021	103N0050	117-7117	117-7119	117U6004	117U5014		103N1010	103N2010
173	169	6.2	6.2	5.0		103N0011	103N0018	103N0016	103N0021	103N0050	117-7117	117-7119				103N1010	103N2010
173	169	6.2	6.2	5.0		103N0011	103N0018	103N0016	103N0021	103N0050	117-7117	117-7119				103N1010	103N2010
188	181	6.2	6.2	5.0		103N0011	103N0018						117U6004	117U5015		103N1010	103N2010
190	183	6.2	6.2	5.0		103N0011	103N0018						117U6000	117U5015		103N1010	103N2010
203	197	8.2	6.5	6.5	X								117U4140	117U5018		117U0349	117U1023
197	191	6.2	6.2	5.0		103N0011	103N0018						117U6001	117U5015		103N1010	103N2010
197	191	8.2	6.2	6.2		103N0011	103N0018						117U6001	117U5015		103N1010	103N2010
203	197	8.2	6.5	6.5	X								117U4140	117U5018		117U0349	117U1021
203	197	8.2	6.2	6.2	X	103N0011	103N0018						117U6002	117U5015		103N1010	103N2010
203	197	8.2	6.5	6.5	X								117U4139	117U5018		117U0349	117U1023
203	197	8.2	6.2	6.2	X	103N0011	103N0018						117U6022	117U5018		103N1010	103N2011
188	182	6.2	6.2	5.0		103N0011	103N0018						117U6017	117U5015		103N1010	103N2010
197	191	6.2	6.2	5.0		103N0011	103N0018						117U6001	117U5015		103N1010	103N2010
188	182	6.2	6.2	5.0		103N0011	103N0018						117U6001	117U5015		103N1010	103N2010
190	184	6.2	6.2	5.0	X	103N0011	103N0018						117U6001	117U5015		103N1010	103N2010
197	191	6.2	6.2	5.0	X	103N0011	103N0018						117U6015	117U5015		103N1010	103N2010
203	197	8.2	6.2	6.2	X	103N0011	103N0018						117U6002	117U5015		103N1010	103N2010
197	191	6.2	6.2	5.0		103N0011	103N0018	103N0016	103N0021		117-7117	117-7119				103N1010	103N2010
203	197	8.2	6.2	6.2		103N0011	103N0018	103N0016	103N0021	103N0050	117-7117	117-7119				103N1010	103N2010
203	197	6.2	6.2	5.0	X			103N0016	103N0021	103N0050	117-7117 *	117-7119 *				103N1010	103N2010
203	197	6.2	6.2	5.0	X			103N0016	103N0021	103N0050	117-7117 *	117-7119 *				103N1010	103N2010
203	197	8.2	6.2	6.2	X			103N0016	103N0021	103N0050	117-7117 *	117-7119 *				103N1010	103N2010
196	191	8.2	6.2	6.2	X	103N0011	103N0018						117U6010	117U5015		103N1010	103N2010
209	203	8.2	6.2	6.2		103N0011							117U6003	117U5017		103N1004	103N2009
209	203	10.2	6.2	6.2									117U6005	117U5017		103N1004	103N2009
219	213	10.2	6.2	6.2									117U6019	117U5017		103N1004	103N2009
219	213	10.2	6.2	6.2									117U6019	117U5017		103N1004	103N2009
209	203	10.2	6.2	6.2									117U6005	117U5017		103N1004	103N2008
219	213	10.2	6.2	6.2									117U6019	117U5017	117-7039	103N1004	103N2009
219	213	10.2	6.2	8.2									117U6019	117U5017		103N1004	103N2009
249	244	12.0	6.2	6.2									117U6003	117U5017		103N1004	103N2009
249	244	12.0	6.2	6.2									117U6005	117U5017		103N1004	103N2009
259	254	16.0	6.2	6.2									117U6019	117U5017		103N1004	103N2009
259	254	16.0	6.2	6.2										117U5373	117-7029	103N1004	103N2009
259	247	12.9	6.5	8.2											117-7055		107B9101
259	247	12.9	6.5	8.2											117-7056		107B9101
259	247	12.9	6.5	8.2											117-7070		107B9101

R134a • 220-240 V • 50/60 Hz

Compressor	Code number	Application	ASHRAE Capacity [W] T_c=54.4°C, T_{liq}=32.2°C, T_{suc}=32.2°C Evaporating temperature [°C]						ASHRAE LBP rating point -23.3°C / 54.4°C		ASHRAE MBP rating point -6.7°C / 54.4°C		ASHRAE HBP rating point 7.2°C / 54.4°C		Displacement	Voltage and frequencies (* dual frequency type with 50/60 Hz)	Compressor cooling (refer to data sheet)
			-35	-15	-5	0	10	15	Cooling capacity [W]	COP [W/W]	Cooling capacity [W]	COP [W/W]	Cooling capacity [W]	COP [W/W]	[cm³]		
PL35G	101G0250	M/HBP		66	111	140	214	261	39	0.79	93	1.31	174	1.89	2.00	198-254 V, 50 Hz *	F1
TL2.5G	102G4251	L/M/HBP	14	86	144	181	274	331	51	0.82	121	1.36	223	1.92	2.61	187-254 V, 50 Hz *	S
TL3G	102G4350	L/M/HBP		100	169	213	322	390	59	0.85	142	1.38	262	1.93	3.13	187-254 V, 50 Hz *	S
TL4G	102G4452	L/M/HBP		134	223	281	426	515	81	0.94	187	1.51	347	2.23	3.86	187-254 V, 50 Hz *	S
TL4GH	102G4455	HBP		130	226	287	440	536			189	1.48	357	2.21	3.86	198-254 V, 50 Hz *	F2
TL5G	102G4550	L/M/HBP		173	278	346	515	620	109	1.04	234	1.48	421	2.01	5.08	187-254 V, 50 Hz *	S
TLES6.5FT.3	102G4703	LBP	89	283					183	1.33					6.49	187-254 V, 50 Hz *	S
TLES7FT.4	102G4708	LBP	89	283					183	1.33					6.49	187-254 V, 50 Hz *	S
NL6FT	105G6628	LBP	74	245					157	1.21					6.13	187-254 V, 50 Hz *	S
NL6.1MF	105G6660	MBP		234	388	486	733	886			326	1.66	597	2.41	6.13	187-254 V, 50 Hz *	S
NL7.3MF	105G6772	MBP		293	478	597	896	1082			402	1.69	731	2.40	7.27	187-254 V, 50 Hz *	F1
NL8.4MF	105G6879	MBP		343	552	687	1029	1242			465	1.69	839	2.35	8.35	187-254 V, 50 Hz *	F1
NL10MF	105G6885	MBP		429	688	854	1274	1536			580	1.70	1040	2.35	10.09	187-254 V, 50 Hz *	F1
NF10FX	105G6846	L/MBP		418	672	833			267	0.95	567	1.47	1011	2.13	10.09	198-242 V, 50 Hz *	F1
FR6G	103G6660	L/M/HBP		213	360	453	688		121	1.04	302	1.64	560	2.28	6.23	187-254 V, 50 Hz *	F1
FR7GH	103G6683	HBP		247	408	520	818	1009			341	1.65	658	2.52	6.93	198-254 V, 50 Hz *	F2
FR7.5G	103G6680	L/M/HBP		240	403	507	770		141	1.06	338	1.62	626	2.25	6.93	187-254 V, 50 Hz *	F1
FR8.5G	103G6780	L/M/HBP		284	473	594	900		172	1.08	397	1.60	732	2.23	7.95	187-254 V, 50 Hz *	F1
FR10G	103G6880	L/M/HBP		310	511	641	970		189	1.01	429	1.53	789	2.14	9.05	187-254 V, 50 Hz *	F1
SC12FT	104G8205	LBP	129	506	803				322	1.16	678	1.69			12.87	187-254 V, 50 Hz *	F1
SC15FT	104G8505	LBP	158	607	959				386	1.18	811	1.70			15.28	187-254 V, 50 Hz *	F2
SC18FTX	104G8805	LBP	181	704	1115				448	1.17	942	1.73			17.69	187-254 V, 50 Hz *	F2
SC18MFX	104G8804	MBP		686	1109	1382	2079		434	1.15	933	1.68	1694	2.36	17.69	187-254 V, 50 Hz *	F2
SC10G	104G8000	L/M/HBP	30	334	604	767	1150	1370	169	0.87	502	1.64	942	2.43	10.29	187-254 V, 50 Hz *	F2
SC10GH	104G8041	HBP		290	593	762	1158	1394			490	1.61	944	2.35	10.29	198-254 V, 50 Hz *	F2
SC12G	104G8240	L/M/HBP	81	433	750	955	1473	1794	249	1.03	626	1.65	1194	2.36	12.87	187-254 V, 50 Hz *	F2
SC12GH	104G8261	HBP		378	719	937	1491	1837			594	1.56	1199	2.42	12.87	198-254 V, 50 Hz *	F2
SC15G	104G8520	L/M/HBP		528	905	1129	1671	2001	261	1.01	760	1.61	1369	2.27	15.28	187-254 V, 50 Hz *	F2
SC15GH	104G8561	HBP		518	899	1139	1744	2120			751	1.65	1415	2.49	15.28	198-254 V, 50 Hz *	F2
SC18G	104G8820	L/M/HBP		659	1083	1349	2014	2420	398	1.14	910	1.63	1645	2.29	17.69	187-254 V, 50 Hz *	F2
SC18GH	104G8861	HBP		603	1026	1303	2018	2468			857	1.79	1632	2.66	17.69	198-254 V, 50 Hz *	F2
SC21G	104G8140	L/M/HBP		756	1262	1581	2355	2814	462	1.23	1059	1.73	1928	2.48	20.95	187-254 V, 50 Hz *	F2

						Electrical equipment											
Dimensions						LST (RSIR & RSCR) refer to data sheet for more info					Run capacitor (RC)		HST (CSIR & CSR) * alt. cable lengths avail.			LST/HST	
Height [mm]		Connectors location/I.D. [mm]			alt. connectors available	PTC starting device		PTC starting device with RC connector		ePTC	• optional • compulsory *		Starting relay	Starting capacitor	Starting device *	Cord relief	Cover
		Suction	Process	Dis-charge		Spades		Spades		Spades	Spades		Spades		Spades		
A	B	C	D	E		6.3 mm	4.8 mm	6.3 mm	4.8 mm	4.8 mm	6.3 mm	4.8 mm	6.3 mm	6.3 mm	6.3 mm		
137	135	6.2	6.2	5.0	X	103N0011	103N0018						117U6021	117U5014		103N1010	103N0491
163	159	6.2	6.2	5.0	X	103N0011	103N0018						117U6007	117U5014		103N1010	103N2011
163	159	6.2	6.2	5.0	X	103N0011	103N0018						117U6009	117U5014		103N1010	103N2010
173	169	6.2	6.2	5.0	X	103N0011	103N0018						117U6004	117U5014		103N1010	103N2010
173	169	6.2	6.2	5.0									117U6000	117U5014		103N1010	103N2011
173	169	6.2	6.2	5.0	X	103N0011	103N0018						117U6000	117U5014		103N1010	103N2010
173	169	6.2	6.2	5.0	X	103N0011	103N0018	103N0016	103N0021		117-7117	117-7119	117U6016	117U5014		103N1010	103N2010
173	169	6.5	6.5	5.0		103N0011	103N0018	103N0016	103N0021		117-7117	117-7119	117U6016	117U5014		103N1010	103N2010
197	191	6.2	6.2	5.0		103N0011	103N0018						117U6000	117U5015		103N1010	103N2010
190	184	8.2	6.2	6.2	X	103N0011	103N0018						117U6015	117U5015		103N1010	103N2011
197	191	8.2	6.2	6.2	X	103N0011	103N0018						117U6016	117U5015		103N1010	103N2011
197	191	8.2	6.2	6.2	X	103N0011	103N0018						117U6016	117U5018		103N1010	103N2011
203	197	8.2	6.2	6.2	X	103N0011	103N0018						117U6022	117U5038		103N1010	103N2011
203	197	8.2	6.5	6.5	X								117U4139	117U5018		117U0349	117U1023
196	191	8.2	6.2	6.2		103N0011	103N0018						117U6000	117U5015		103N1010	103N2010
196	191	8.2	6.2	8.2									117U6016	117U5015		103N1010	103N2011
196	191	8.2	6.2	6.2	X	103N0011	103N0018						117U6001	117U5015		103N1010	103N2010
196	191	8.2	6.2	6.2		103N0011	103N0018						117U6015	117U5015		103N1010	103N2010
196	191	8.2	6.2	6.2	X	103N0011	103N0018						117U6010	117U5015		103N1010	103N2010
209	203	8.2	6.2	6.2		103N0011							117U6003	117U5017		103N1004	103N2009
209	203	10.2	6.2	6.2	X	103N0011							117U6005	117U5017		103N1004	103N2009
219	213	10.2	6.2	6.2	X								117U6019	117U5017		103N1004	103N2009
219	213	10.2	6.2	6.2									117U6019	117U5017	117-7027	103N1004	103N2008
199	193	8.2	6.2	6.2		103N0011							117U6002	117U5017		103N1004	103N2009
209	203	10.2	6.2	8.2									117U6005	117U5017		103N1004	103N2008
209	203	8.2	6.2	6.2	X	103N0011							117U6003	117U5017		103N1004	103N2009
209	203	10.2	6.2	8.2									117U6011	117U5017		103N1004	103N2008
209	203	10.2	6.2	6.2	X								117U6005	117U5017		103N1004	103N2009
209	203	10.2	6.2	8.2	X								117U6011	117U5017		103N1004	103N2008
219	213	10.2	6.2	6.2	X								117U6019	117U5017		103N1004	103N2009
219	213	10.2	6.2	8.2										117U5373	117-7039	103N1004	103N2008
219	213	10.2	6.2	6.2	X									117U5373	117-7029	103N1004	103N2009

PL / PLE

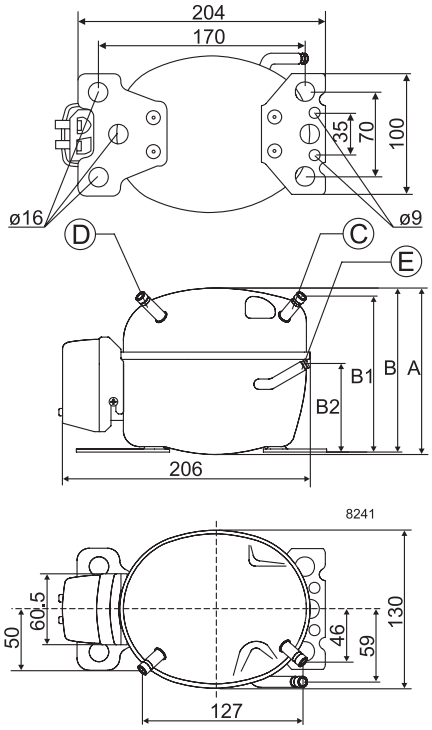

TL / TLS / TLES / TLY

Note:
On TL compressors suction and process connectors are interchangeable.

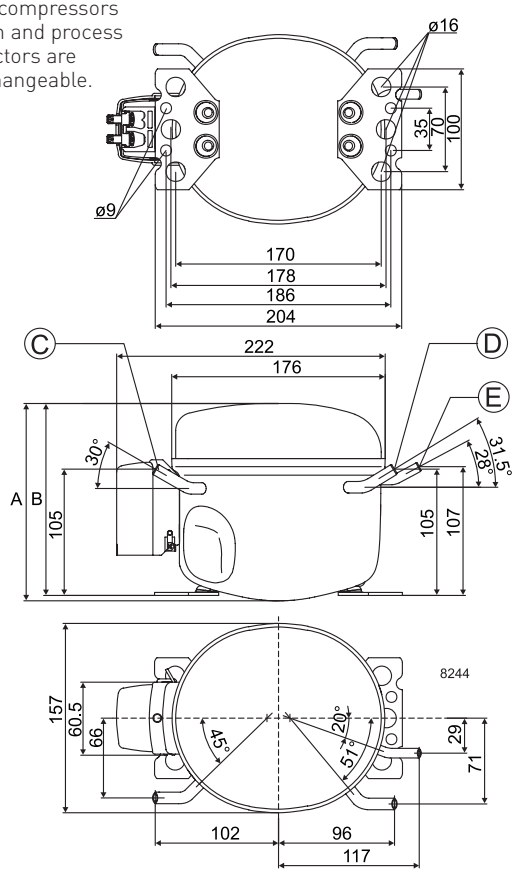

NL / NLE (NLY similar)

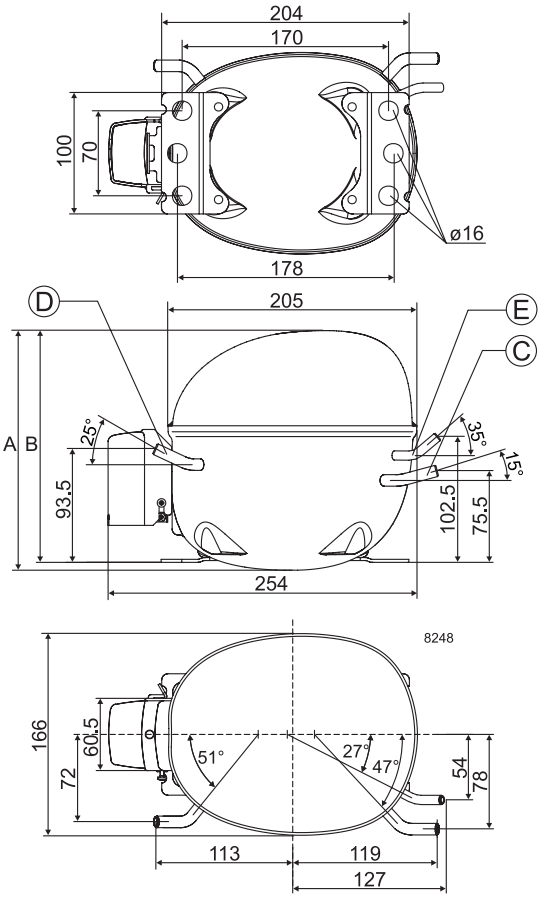

NF

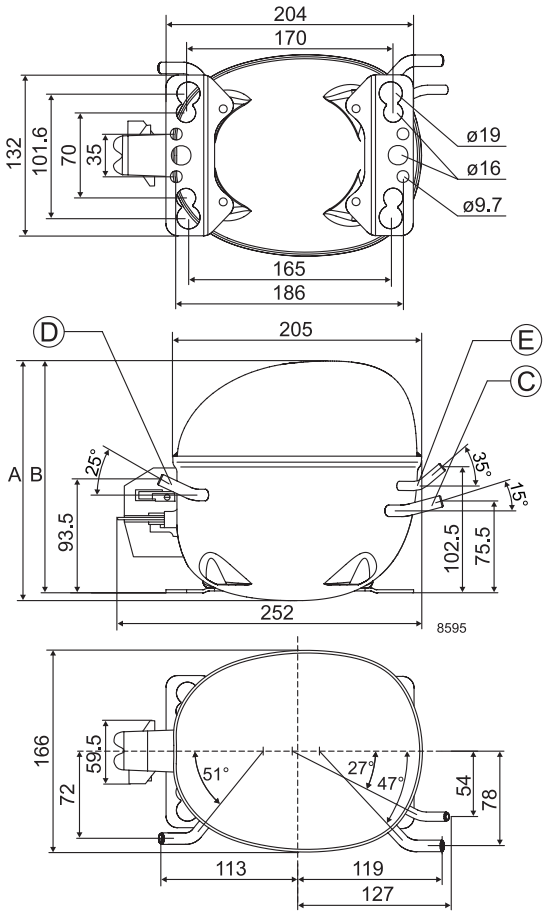

FR

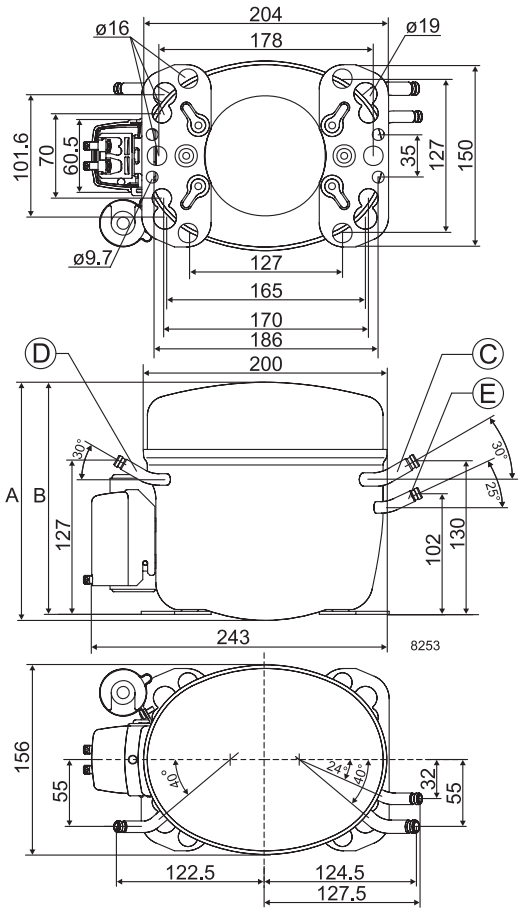

GS

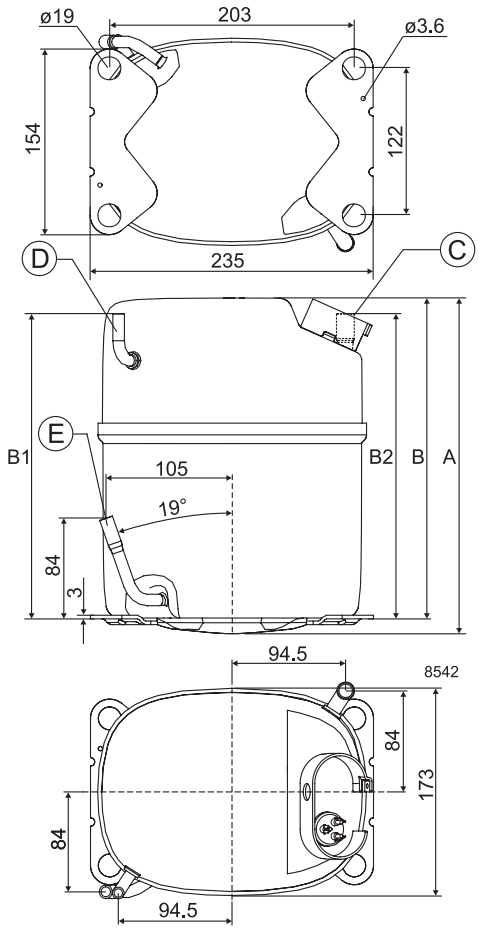

SC

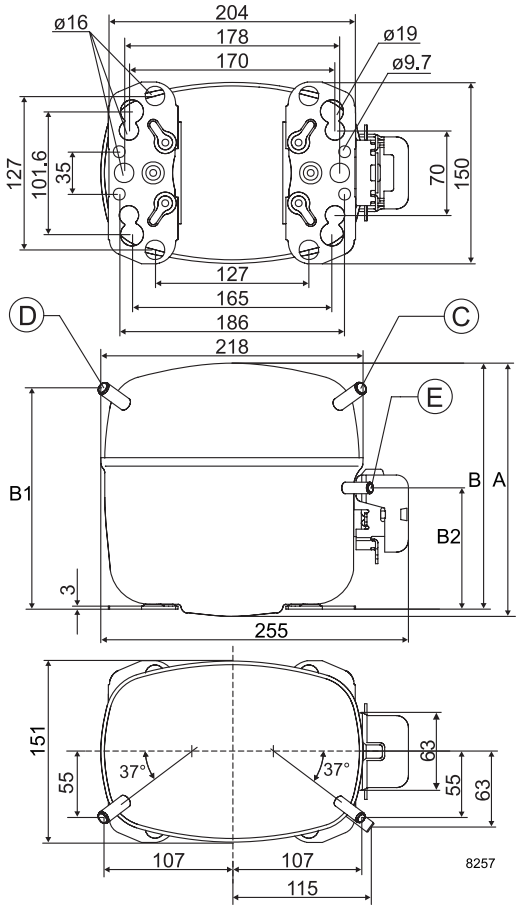

SC-Twin

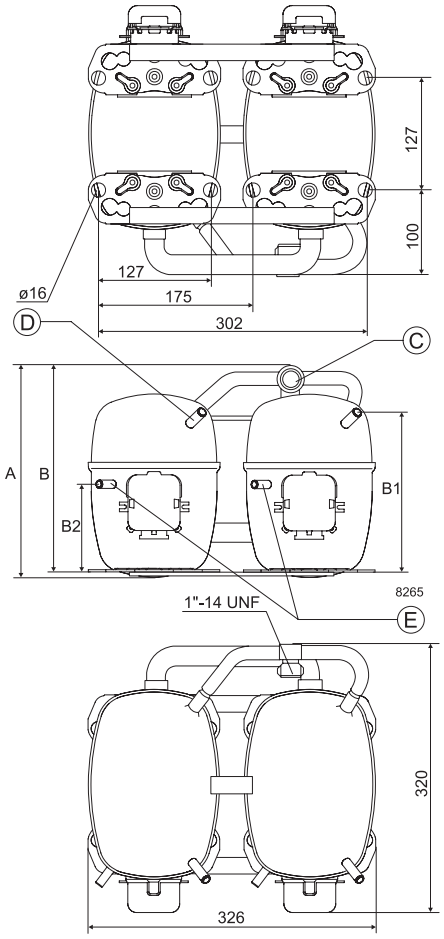

LST - RSIR

PL-DLE

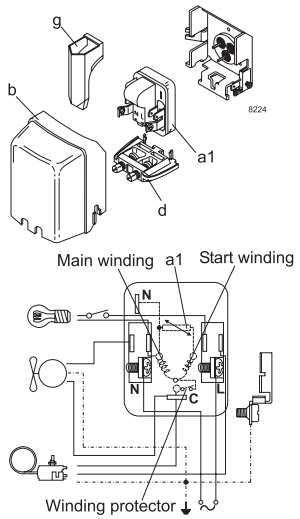

TL/TLES/TLS/TLY - NL/NLE - FR

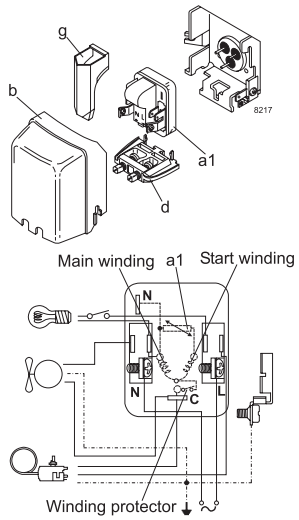

LST - RSCR

PLE - DLE/DLX/DLY

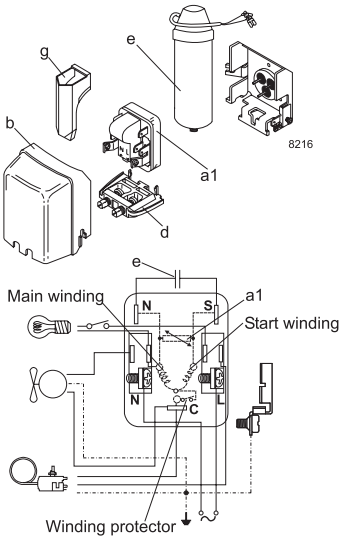

HST - CSIR

PL - DLE

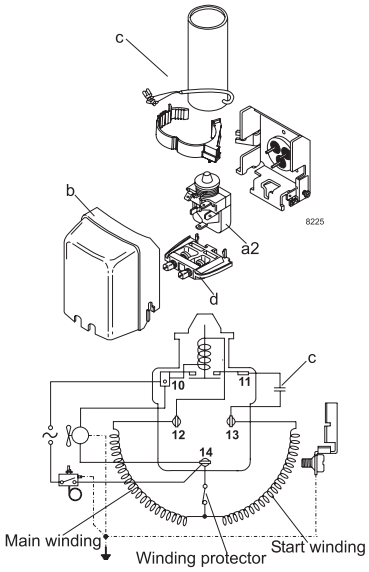

TL/TLES/TLS - NL/NLE - FR

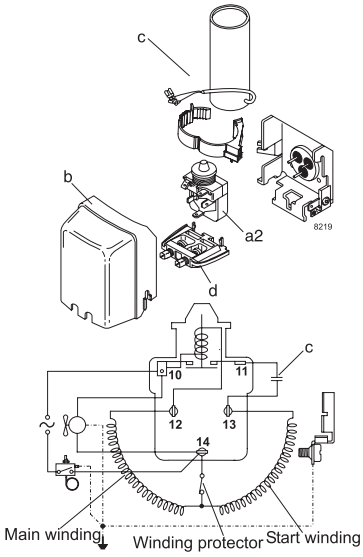

LST - RSCR

TLES/TLS/TLX/TLY - NLE/NLU/NLX/NLY

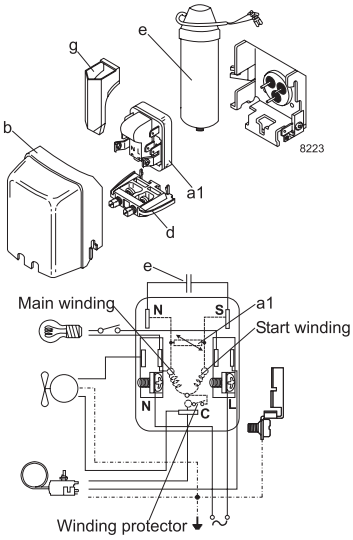

Legend

- **a1:** PTC starting device
- **a2:** Starting relay
- **a3:** Starting device
- **b:** Cover
- **b1:** Clamp (part of compressor)
- **b2:** Gasket (part of compressor)
- **c:** Starting capacitor
- **d:** Cord relief
- **e:** Run capacitor
- **f:** Protector
- **g:** Protection screen for PTC
- **h:** Holder

HST - CSIR

SC Twin

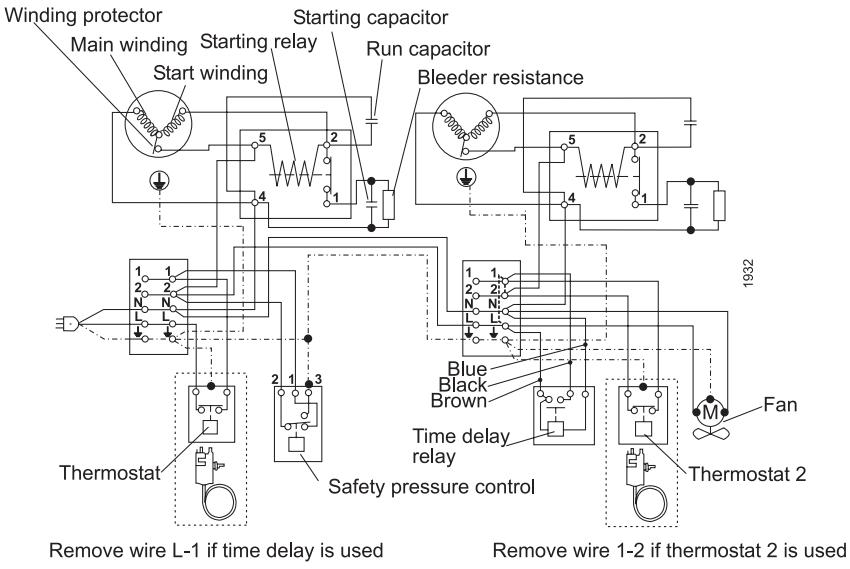

LST - RSIR

TF/TFS - NF - FF - external protector

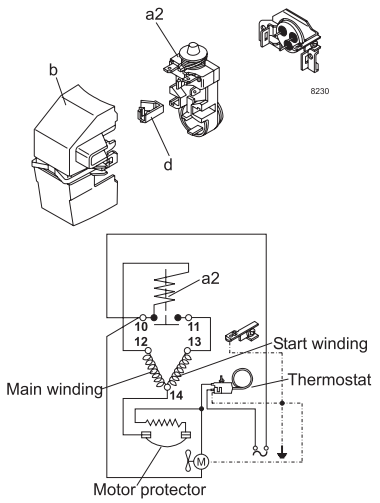

TT - external protector

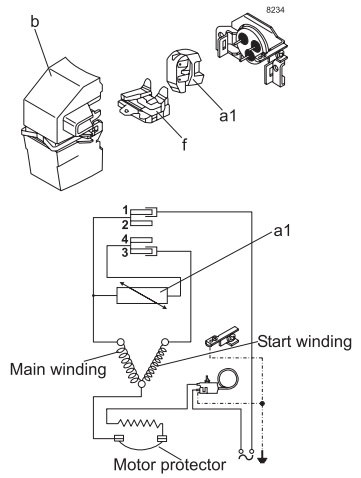

TF - NF - FF - external protector

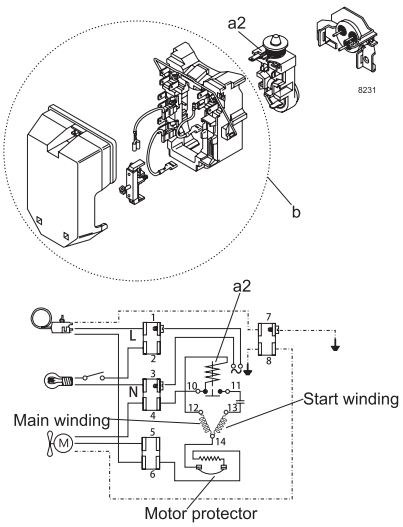

HST - CSIR

TFS - NF - FF - external protector

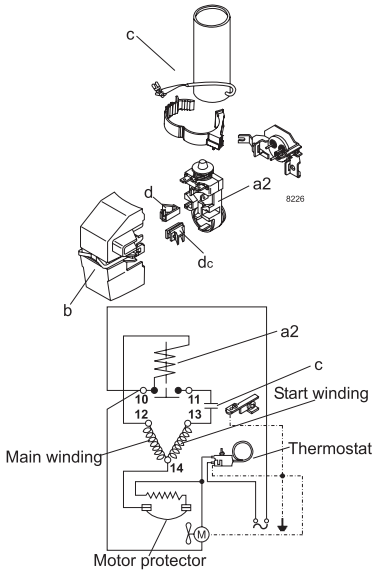

FF - external protector

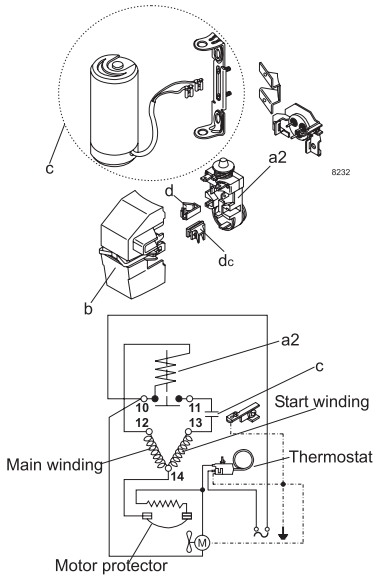

TF - NF - FF - external protector

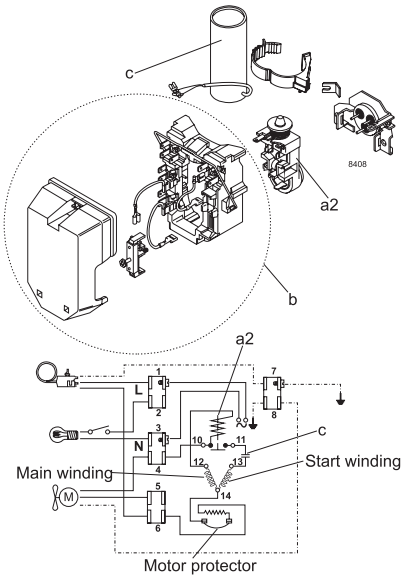

HST - CSR

SC Twin

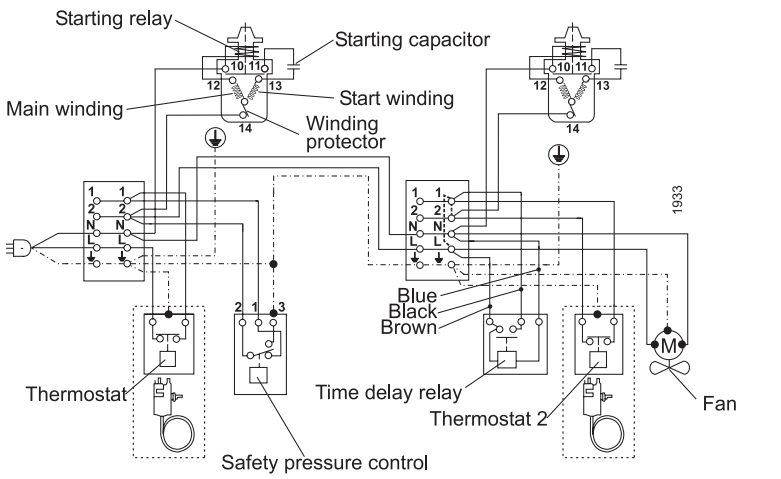

Remove wire L-1 if time delay is used

Remove wire 1-2 if thermostat 2 is used

LST - RSCR

TTE/TTY - NTX/NTY - external protector

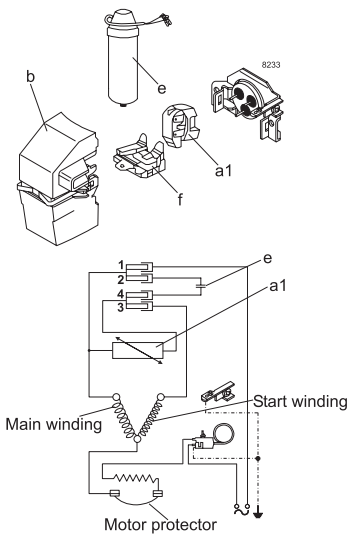

HST - CSIR

SC

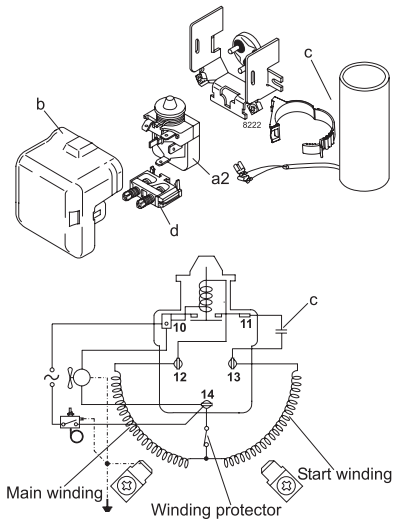

SC - external protector

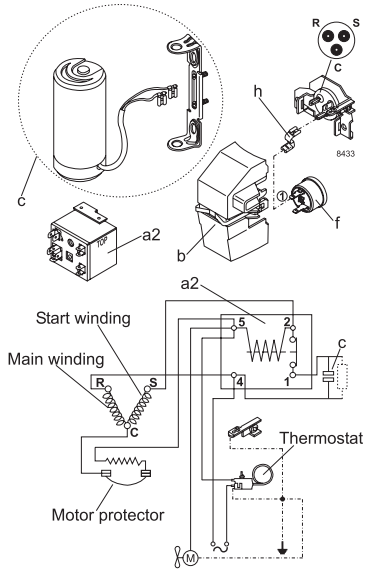

SC - external protector

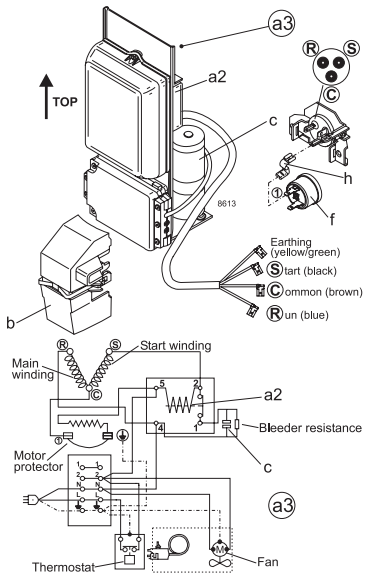

LST - RSIR

SC

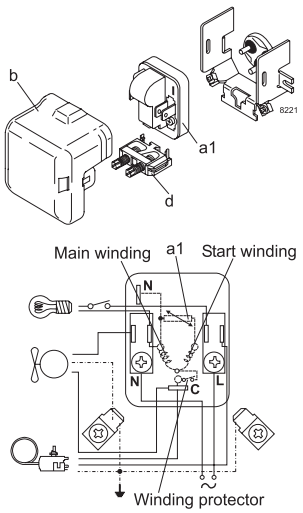

HST - CSR

SC - external protector

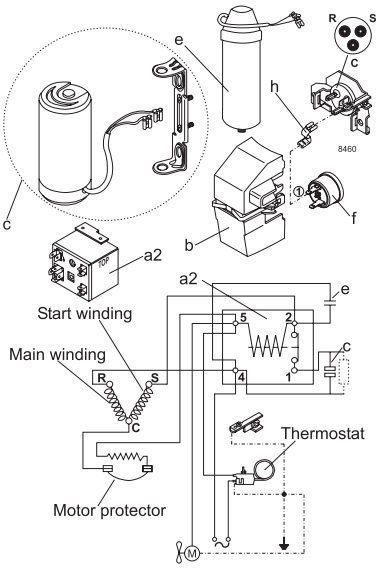

SC - external protector

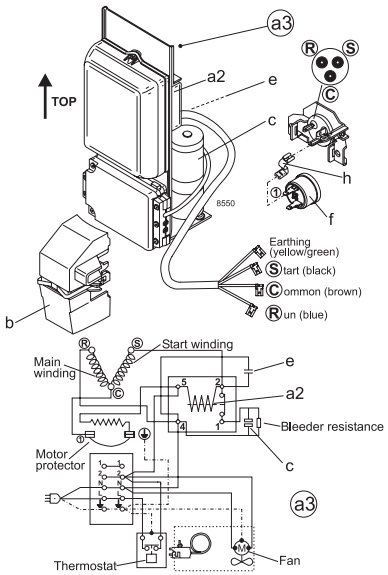

HST - CSR

SC

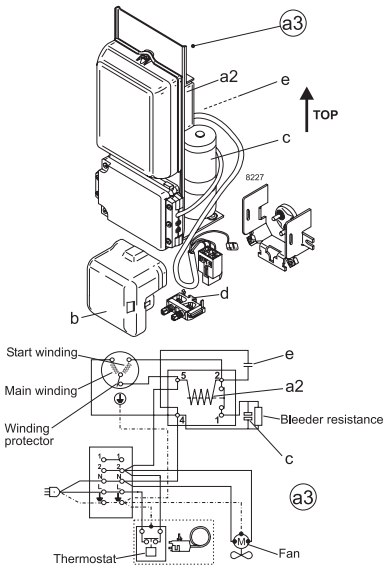

SC (kit) - alternative to starting device

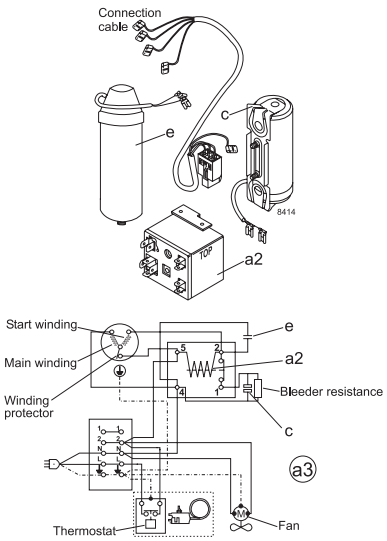

GS

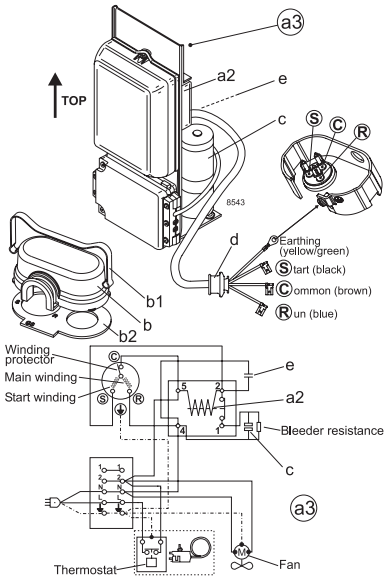

Mounting accessories

Mounting	Code number	Bolt / pin dimension	Comp. base hole	Type of packaging	Compressor series	Parts list
Bolt joint	118-1917	M6 metric	16 mm	Single pack for one compressor	BD- / P- / T- / X- / D- / N- / F- / S-Series	I
Bolt joint	118-1918	M6 metric	16 mm	Industrial pack in any quantity	BD- / P- / T- / X- / D- / N- / F- / S-Series	I
Bolt joint	107B9150	M8 metric	19 mm	Single pack for one compressor	G-Series	II
Bolt joint	118-1946	1/4 inch	16 mm	Single pack for one compressor	BD- / P- / T- / X- / D- / N- / F- / S-Series	III
Bolt joint	118-1949	1/4 inch	19 mm	Single pack for one compressor	all with 19 mm base holes (except G-Series)	IV
Snap-on	118-1947	Ø 7.3 mm	16 mm	Single pack for one compressor	BD- / P- / T- / X- / D- / N- / F- / S-Series	V
Snap-on	118-1919	Ø 7.3 mm	16 mm	Industrial pack in any quantity	BD- / P- / T- / X- / D- / N- / F- / S-Series	V

Parts list (4 pcs. per compressor needed)		
I	Sleeve Ø 8 mm x 6.4 mm x 0.8 mm	112-2052
	Washer Ø 20 mm x Ø 6.7 mm x 1 mm	112-2053
	Bolt M6 x 25 mm	681X1130
	Nut M6	118-3659
	Rubber grommet 16 mm	118-3661
II	Sleeve Ø 11 mm x 8.6 mm x 1.2 mm	107B9152
	Washer Ø 20 mm x Ø 8.8 mm x 1.2 mm	107B9155
	Bolt M8 x 40 mm	107B9153
	Nut M8	107B9154
	Rubber grommet 19 mm	107B9151
III	Sleeve Ø 8.3 mm x 6.7 mm x 0,8 mm	112-2088
	Washer Ø 20 mm x Ø 6.7 mm x 1 mm	112-2053
	Bolt 1/4 x 1 inch, 20 UNC	119-3002
	Nut 1/4 inch, 20 UNC	119-3031
	Rubber grommet 16 mm	118-3661
IV	Sleeve Ø 9.5 mm x 7.9 mm x 0,8 mm	112-2085
	Washer Ø 20 mm x Ø 6.7 mm x 1 mm	112-2053
	Bolt 1/4 x 1 1/4 inch, 20 UNC	119-3002
	Nut 1/4 inch, 20 UNC	119-3031
	Rubber grommet 19 mm	118-3666
V	Steel pin	118-3586
	Washer Ø 21 x Ø 8.1 mm x 0.9 mm	118-3588
	Clip	118-3585
	Rubber Grommet 16 mm	118-3661

Symbol drawings

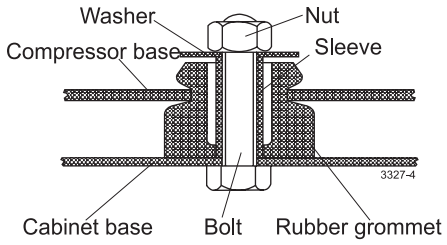

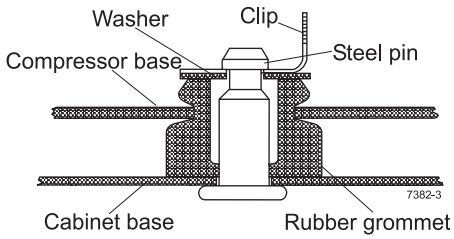

Further information

Applications
LBP: Low Back Pressure
HBP: High Back Pressure
MBP: Medium Back Pressure

Motor types
RSIR: Resistant Start Induction Run
RSCR: Resistant Start Capacitor Run
CSIR: Capacitor Start Induction Run
CSR: Capacitor Start Run

Compressor cooling
S = Static cooling normally sufficient
O = Oil cooling
F1 = Fan cooling 1.5 m/s (compressor compartment temp. equal to ambient temperature)
F2 = Fan cooling 3.0 m/s necessary

Starting devices
LST: Low Starting Torque
LST is used with capillary tube control and pressure equalizing. (Pressure equalizing may exceed 10 minutes).The PTC starting device requires 5 minutes cooling before each start.
HST: High Starting Torque
HST consisting of relay and starting capacitor is used for expansion valve control or for capillary tube control without pressure equalizing.
ePTC: Electronically controlled PTC
- Compressor restart possible after a few seconds
- Operational wattage loss reduced by 2 watt
- PTC protection screen not needed (surface temp. < 82 °C)

Accessories for SC Twin

SC10/10, SC12/12 and SC15/15:

Service valve for 12 mm tube	118-7350
Solder connector for 12 mm tube	104B0584

SC18/18 and SC21/21:

Service valve for 16mm tube	118-7351
Solder connector for 16mm tube	118-7405

SC10/10, SC12/12, SC15/15, SC18/18 and SC21/21:

Seal ring for service valve and solder connector	118-3638
Time delay relay	117N0001
Check valve (to be used with time – delay relay)	020-1014

PTC protection screen

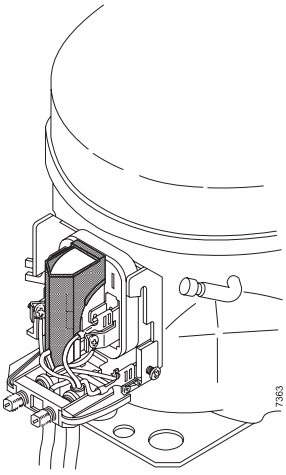

Note:
To fulfil the requirements of EN 60335-2-34 the protection screen 103N0476 must be applied to the PTC starting device.

OUR IDENTITY

At Secop we are committed to our industry and are genuinely passionate about the difference we are able to make for our customers. We understand their business and objectives and the challenges of today's world of refrigeration and cooling systems.

We work in a straightforward way, being open, direct and honest because we want to make things clear and easy. Our people are committed to increasing value for our customers and constantly strive for better performance, knowing that our own progression and success is dependent on theirs.

A NEWCOMER WITH 60 YEARS OF EXPERIENCE

Formerly known as Danfoss Compressors, Secop is one of the founding fathers of modern compressor technology with an experience that goes back to the beginning of the 1950s.

For more than 25 years, Secop has been setting the standard in compressor technology by developing highly efficient variable speed compressors and by compressors working with hydrocarbons (R290 and R600a).

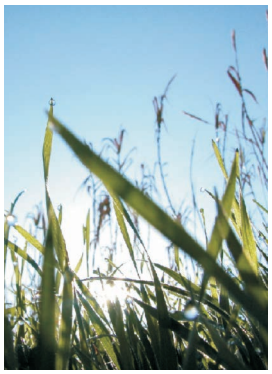

OUR JOURNEY SO FAR

1956 Production facility and headquarters in Flensburg, Germany founded.

1958 Start of production for PW compressors.

1970 Introduction of SC compressors. The birth of a standard-setting platform in the light commercial market.

1972 Introduction of FR compressors.

1977 Introduction TL and BD compressors.

1990 Introduction of NL compressors.

1992 Introduction of PL compressors.

1993 Start of production with natural refrigerant R600a (isobutane). Production facility in Crnomelj, Slovenia founded.

1999 Start of production with natural refrigerant R290 (propane).

2002 Production facility in Zlate Moravce, Slovakia founded.

2005 Introduction of GS compressors.

2008 Production facility in Wuqing, China founded.

2010 Introduction SLV-CNK.2 and SLV-CLK.2 variable speed compressors. Introduction BD1.4F Micro DC compressor. Introduction of DLX and NLU compressors.

2013 Introduction of the XV compressor - opening a new chapter in refrigeration history. Secop acquires ACC Fürstenfeld, Austria.

2015 New generation of energy-efficient propane compressors. New variable speed platforms for household and light commercial applications.

Secop GmbH · Mads-Clausen-Str. 7 · 24939 Flensburg · Germany · Tel: +49 461 4941 0 · **www.secop.com**

Secop can accept no responsibility for possible errors in catalogues, brochures and other printed material. Secop reserves the right to alter its products without notice. This also applies to products already on order provided that such alterations can be made without subsequential changes being necessary in specifications already agreed. All trademarks in this material are property of the respective companies. Secop and the Secop logotype are trademarks of Secop GmbH. All rights reserved

Produced by Secop | July 2016

DES.B.050.I1.02